Kawasaki
Kawasaki Robotics (USA), Inc.

RS30N

Product Specification

Standard Applications:

- Arc Welding
- Dispensing
- Sealing
- Material Handling
- Material Removal
- Machine Tending
- Assembly
- Inspection

series

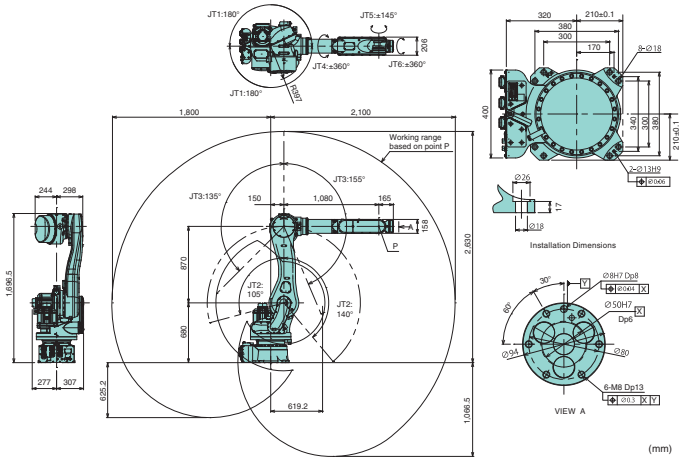

Arm Type	Articulated		
Degrees of Freedom	6		
Axes Work Envelope and Maximum Speed	**Axis**	**Work Envelope**	**Maximum Speed**
	Arm Rotation (JT1)	± 180°	180° /s
	Arm Out-In (JT2)	+140° ~ -105°	180° /s
	Arm Down-Up (JT3)	+135° ~ -155°	185° /s
	Wrist Swivel (JT4)	± 360°	260° /s
	Wrist Bend (JT5)	± 145°	260° /s
	Wrist Twist (JT6)	± 360°	360° /s
Position Repeatability	±0.07 mm		
Payload	30 kg		
Maximum Speed	13,400 mm/s		
Wrist Load Capacity	(kgf * m * s²) (kg * mm²) (Note)		
		Torque	Moment of Inertia
	JT4	210 N*m	16.8 kg*m²
	JT5	210 N*m	16.8 kg*m²
	JT6	130 N*m	6.6 kg*m²
	* Note: each value in this table shows allowable moment of inertia of JT4/JT5/JT6 when maximum allowed torque is applied to each axis. If more detailed data is required for your application, please contact Kawasaki.		
Driving Motor	Brushless AC Servomotor		
Mass	555 kg (excluding options)		
Color	Kawasaki Standard		
Installation	Floor, Ceiling and Wall Mount		
Ambient Temperature Relative Humidity	0 ~ 45° C for manipulator 35 ~ 85% no dew nor frost allowed		
Power/Signal Cable Length	7 m		
IP Rating	IP67 Base Axis:IP65		
Built-in Circuit	Built-in Sensor Harness; 4 Circuits, 24 VDC, GND		
Pneumatic Piping	Built-in Pneumatic Piping		
Options	Power/Signal Cable Length: 10 m, 15 m		
	Built-in Valve		
	Riser		
Consult us about Maintenance Parts and Spare Parts.			

Kawasaki
Kawasaki Robotics (USA), Inc.

Louisville, Kentucky
2726 River Green Circle
Louisville, KY 40206
Phone (502) 893-3889

Mexico
Av. Vallarta #6503 Local B 9
Concentro Zapopan
Jalisco 45010 Mexico
(52) 33 3110-1895

Canada
1155 North Service Rd. West
Suite #4
Oakville, Ontario L6M-3E3
Phone (905) 465-0880

28140 Lakeview Drive
Wixom, Michigan 48393
Phone (248) 446-4100
Email kri-sales@kri-us.com
www.kawasakirobotics.com